PART NO. ST731325-N

CUSTOMER DRAWING

GENERAL TOLERANCE (TERMINAL)					USED ON
10MAX	20MAX	45MAX	ANGLE	ECCENT	
±0.2	±0.25	±0.3	±30'	0.1	

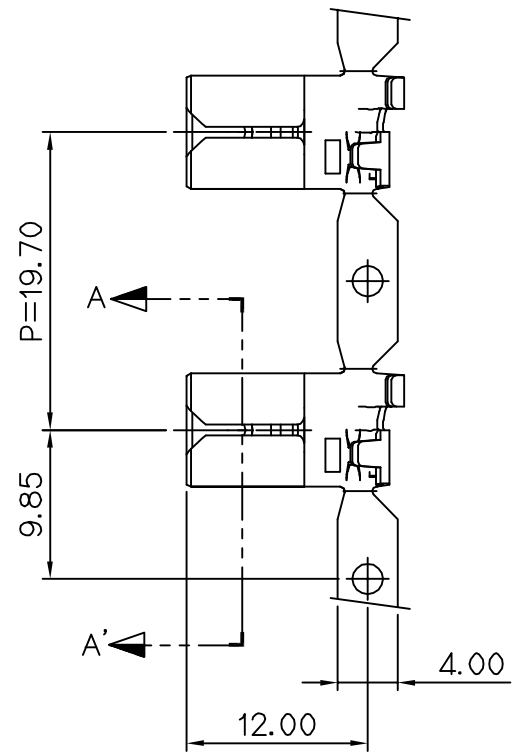

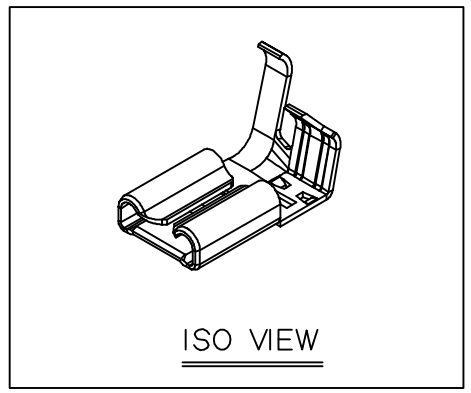

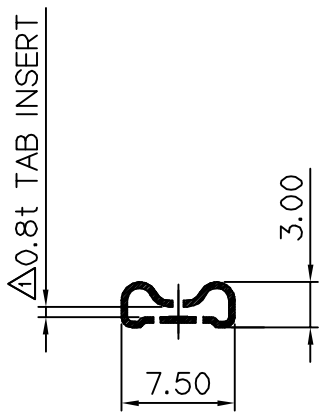

SECTION A–A'

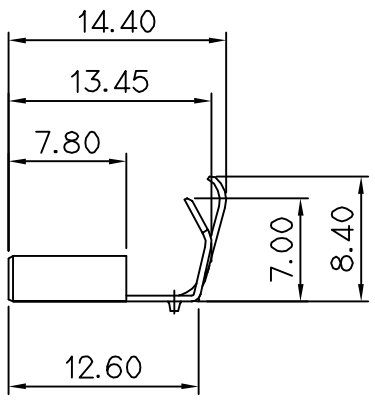

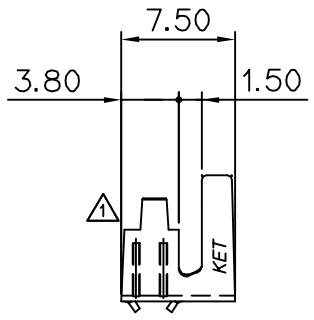

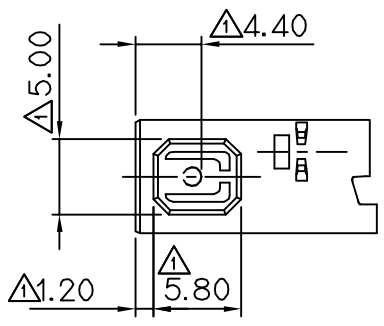

NOTE

1. MUST BE FREE OF BURR, MARK AND IMPERFECTION THAT AFFECT FUCNTION.
2. 6 HAZARDOUS SUBSTANCES IN PARTS (Lead, Mercury, Cadmium, Hexavalent Chromium, PBBs, PBDEs) SHALL NOT EXCEED THE MAXIMUM PERMISSIBLE CONCENTRATION PRESCRIBED UNDER EU ELV DIRECTIVE & RoHS REGULATION

주 기

1. 기능상 유해한 BURR, 찍힘 및 결함 없을 것.
2. 제품내 함유된 6대 유해물질 (납,수은,카드뮴,6가크롬, PBBs,PBDEs)은 EU ELV 지침 및 RoHS 법규에서 지정한 최대 허용 농도를 초과해서는 안된다.

ISSUE MARK

LTR	REVISION RECORD	DR.	CHK.	APP.	DATE
△2	'ECO-1805-256'근거 도면재작성	KSH			2018.05.17
△1	'ECO-1208-402'근거 도면재작성	PJM			2012.07.31

DR. PJM '11. 09. 28 CHK. 9/28

CHK. APP. 9/28

MATERIAL STEEL

FINISH NIKEL

WIRE RANGE △2 #20–#15(1.5)

INSULATION △2 2.15–3.05

TOLERANCE EXCEPT AS NOTED SEE TABLE

SCALE 2/1

PART NAME 250 SLIP–ON FLAG TML

KIET ENGINEERED KOREA ELECTRIC TERMINAL CO., LTD.

CLASS 250

TYPE

PART NO. ST731325-N

(DIMENSIONS IN MM)