PART NO. MG633814

CUSTOMER DRAWING

GENERAL TOLERANCE (HOUSING)					USED ON
10MAX	20MAX	45MAX	ANGLE	ECCENT	
±0.2	±0.25	±0.3	±30'	0.10	

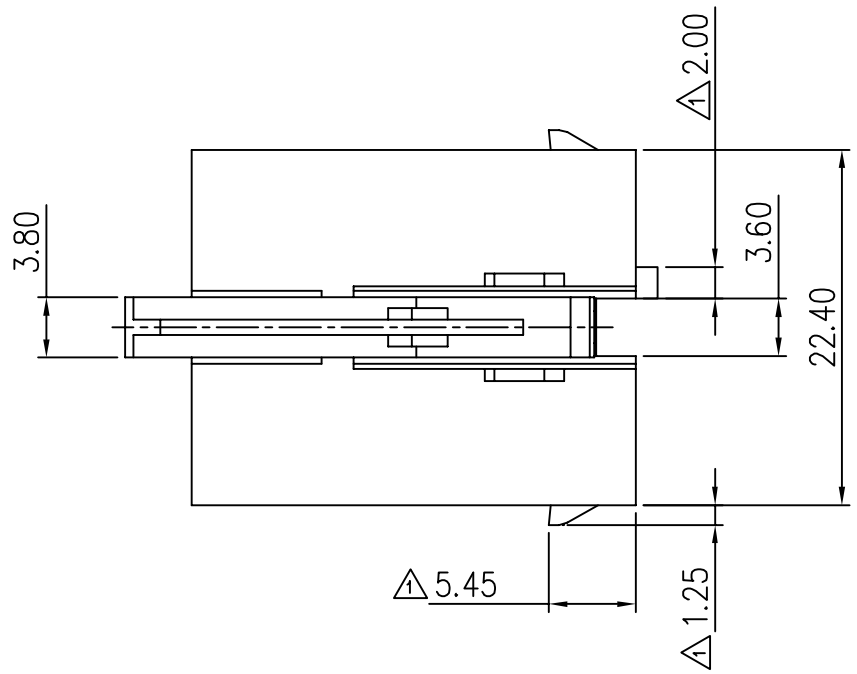

주 기

1.기능상 유해한 BURR, WELDLINE이 없을 것

△1 2.적용 TERMINAL: ST730570-3/571-3/△2 572-3

△1 적용 R/HOLDER : MG634825,△2 MG635432(쌍선용)

△1 3.제품내 함유된 6대 유해물질 (납,수은,카드뮴,6가크롬, PBBs,PBDEs)은 EU ELV 지침 및 RoHS 법규에서 지정한 최대 허용 농도를 초과해서는 안된다.

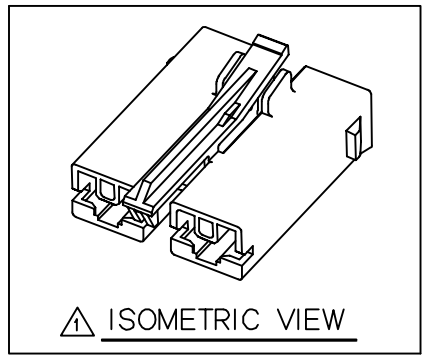

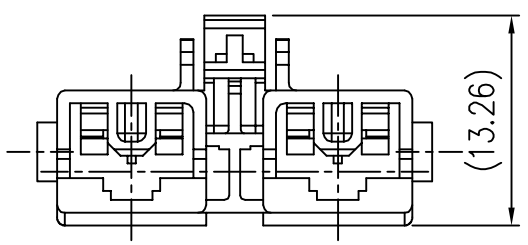

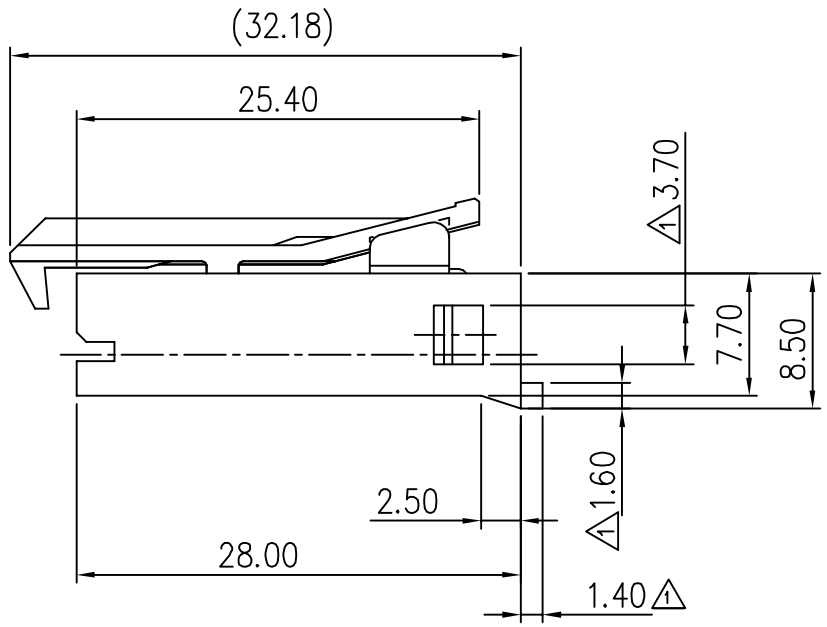

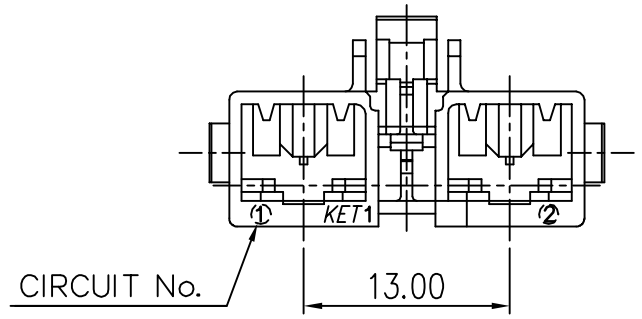

NOTE

1. MUST BE FREE OF BURR, WELDLINE AND IMPERFECTION THAT AFFECT FUNCTION.

△1 2. APPLICABLE TERMINAL : ST730570-3/571-3/△2 572-3

△1 APPLICABLE R/HOLDER : MG634825,△2 MG635432(Double Wire)

△1 3. 6 HAZARDOUS SUBSTANCES IN PARTS (LEAD,MERCURY, CADMIUM,HEXAVALENT CHROMIUM,PBBs,PBDEs) SHALL NOT EXCEED THE MAXIMUM PERMISSIBLE CONCENTRATION PRESCRIBED UNDER EU ELV DIRECTIVE & RoHS REGULATION.

NO.	MATERIAL	COLOR
0	PBT(V0)	NATURAL
1		RED
2		BLUE
3		YELLOW
5		BLACK

ISSUE MARK

LTR	REVISION RECORD	DR.	CHK.	APP.	DATE
△3	설계사양변경(S110128)근거 도면 제작성	KSJ			'11.04.27
△2	설계사양변경(S100313) 근거 도면 수정				'10.12.06
△1	설계사양변경(S090131) 근거 도면 수정	CJH			'09.05.29

DR. KSH. 2007.01.16 CHK. HAK 2007.01.17

CHK. APP. C.B.H 01/31

MATERIAL PBT(V0)

FINISH NATURAL

WIRE RANGE

INSULATION

TOLERANCE EXCEPT AS NOTED SEE TABLE

SCALE 2/1

KOREA ELECTRIC TERMINAL CO., LTD.

CLASS 250

TYPE P-LOCK

PART NO. MG633814

PART NAME 250 P-LOCK 2P HOUSING(VALVE)

(DIMENSIONS IN MM)