PART NO. MG630591T

CUSTOMER DRAWING

GENERAL TOLERANCE (HOUSING)							USED ON
10MAX	50MAX	100MAX	250MAX	250VR	ANGLE	ECCENT	
±0.2	±0.3	±0.55	±0.95	±1.4	±30'	0.1	

NOTE

1. MUST BE FREE OF BURR, WELDLINE AND IMPERFECTION THAT AFFECT FUNCTION.
2. APPICABLE TERMINAL : ST730570-3/571-2/572-3
3. 6HAZARDOUS SUBSTANCES IN PARTS (Lead, Mercury, Cadmium, Hexavalent Chromium, PBBs, PBDEs) SHALL NOT EXCEED THE MAXIMUM PERMISSIBLE CONCENTRATION PRESCRIBED UNDER EU ELV DIRECTIVE & RoHS REGULATION

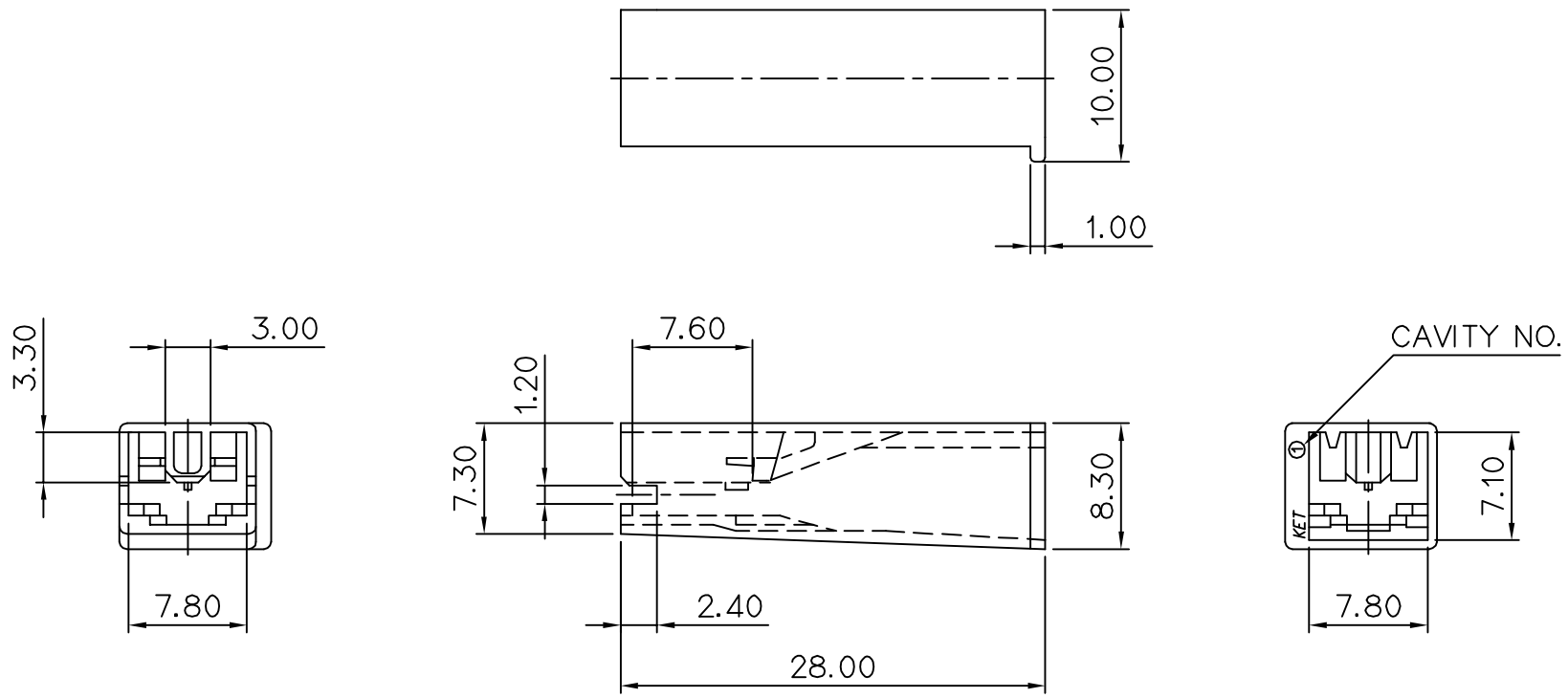

	NO.	COLOR
*	0	NATURAL
	1	RED
	2	BLUE
	3	YELLOW
	5	BLACK

주 기

1. 기능상 유해한 BURR 및 WELDLINE등이 없을것.
2. 적용 터미널 : ST730570-3/571-2/572-3
3. 제품 내 함유된 6대 유해물질 (납, 수은, 카드뮴, 6가 크롬, PBBs, PBDEs)은 EU ELV 지침 및 RoHS 법규에서 지정한 최대 허용농도를 초과해서는 안 된다.

ISSUE MARK

LTR	REVISION RECORD	DR. / CHK.	APP.	DATE

DR.	SMG '15.01.08
CHK.	KSH '15.01.08
CHK.	
APP.	BUC '15.01.08

MATERIAL	PET+PC(GWIT)	KIET ENGINEERED	KOREA ELECTRIC TERMINAL CO., LTD.
FINISH	NATURAL		
WIRE RANGE		CLASS	
INSULATION		TYPE	250 P-LOCK
TOLERANCE EXCEPT AS NOTED	SEE TABLE	SCALE 2/1	PART NO. MG630591T
PART NAME	250 P-LOCK 1F HS'G		

(DIMENSIONS IN MM)