PART NO. MG625076

CUSTOMER DRAWING

GENERAL TOLERANCE (HOUSING)					USED ON
10MAX	20MAX	45MAX	ANGLE	ECCENT	
±0.2	±0.25	±0.3	±30'	0.1	

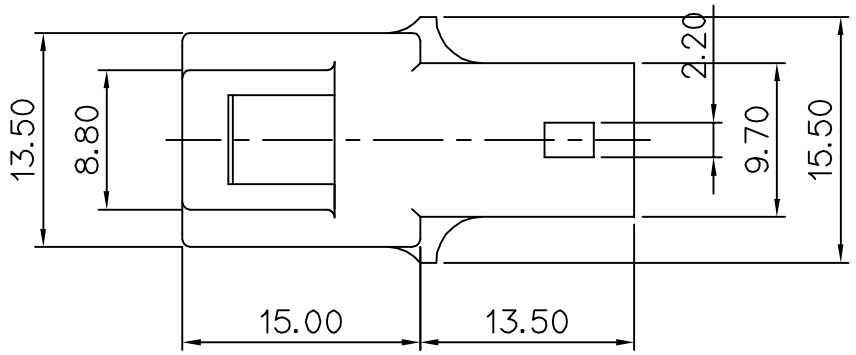

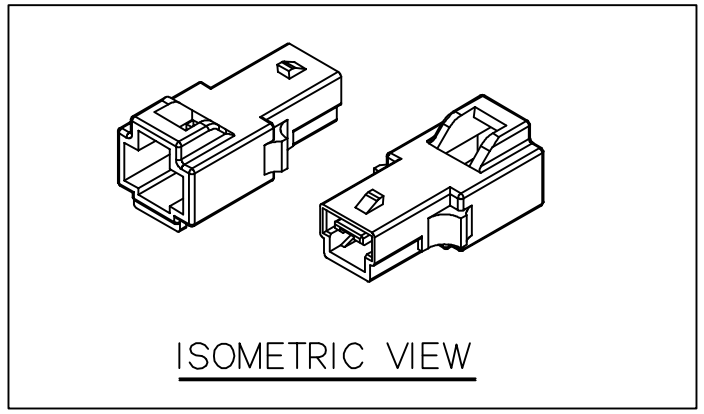

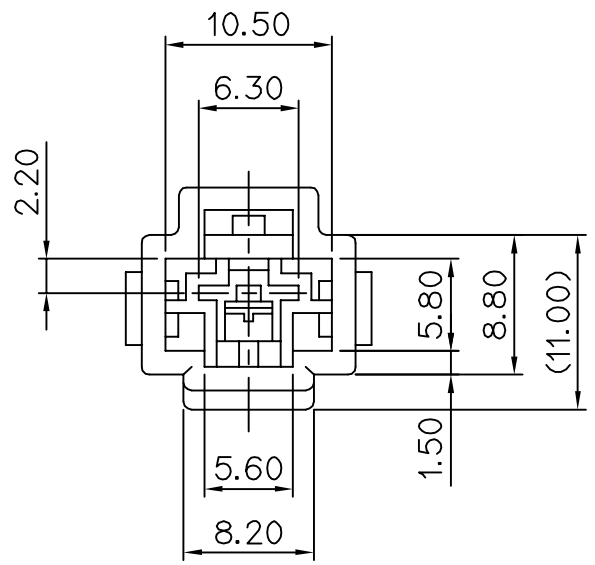

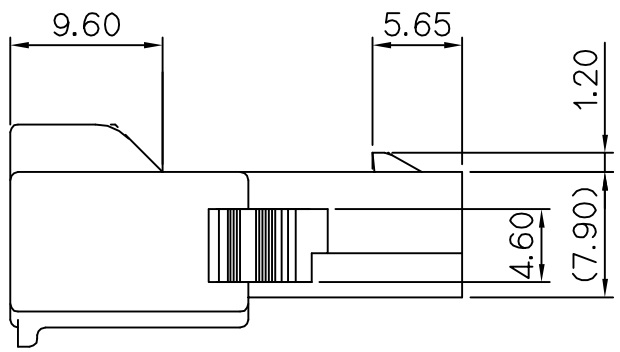

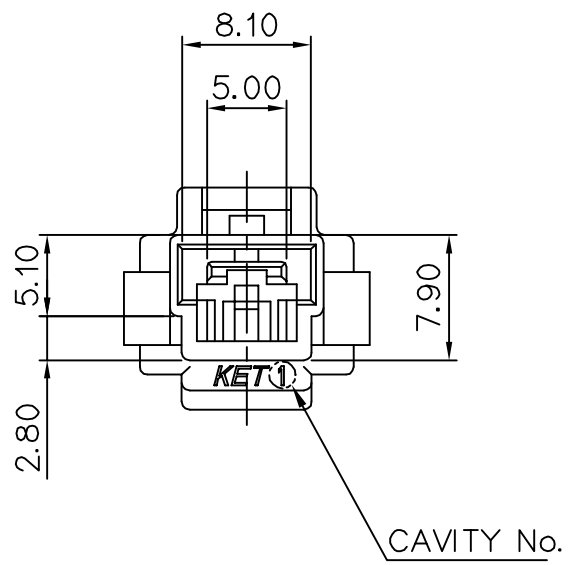

⚠1

NO.	COLOR
0	NATURAL
1	RED
2	BLUE
3	YELLOW
40	DARK GRAY
41	LIGHT GRAY
5	BLACK

주 기

1.기능상 유해한 BURR 및 WELDLINE등이 없을것.

2. 적용 터미널 : ST740253, 254, 255

리홀더 : MG635078

3.제품 내 함유된 6대 유해물질 (납, 수은, 카드뮴, 6가 크롬 PBBs, PBDEs)은 EU ELV 지침 및 RoHS 법규에서 지정한 최대 허용농도를 초과해서는 안 된다.

NOTE

1. MUST BE FREE OF BURR, WELDLINE AND IMPERFECTION THAT AFFECT FUNCTION.
2. APPICABLE TERMINAL : ST740253, 254, 255

   REAR HOLDER : MG635078
3. 6HAZARDOUS SUBSTANCES IN PARTS (Lead, Mercury, Cadmium, Hexavalent Chromium, PBBs, PBDEs) SHALL NOT EXCEED THE MAXIMUM PERMISSIBLE CONCENTRATION PRESCRIBED UNDER EU ELV DIRECTIVE & RoHS REGULATION

(DIMENSIONS IN MM)

ISSUE MARK

LTR	REVISION RECORD	DR. / CHK.	APP.	DATE
⚠1	ECO-1409-113 근거 도면 재작성	LCM / KSH	BUC	'14.09.19

DR.	PJM '10. 01. 15	CHK.	KSH '10. 01. 16
CHK.	CSH '10. 01. 16	APP.	BUC '10. 01. 17

MATERIAL	⚠1PET+PC(GWIT)	KOREA ELECTRIC TERMINAL CO., LTD.	
FINISH	SEE TABLE		
WIRE RANGE		CLASS	
INSULATION		TYPE	250 CONN'T
TOLERANCE EXCEPT AS NOTED	SEE TABLE	SCALE 2/1	PART NO. MG625076
PART NAME	250 1M HOUSING (R/H TYPE)		