PART NO. MG621934

CUSTOMER DRAWING

GENERAL TOLERANCE (HOUSING)					USED ON
10MAX	20MAX	45MAX	ANGLE	ECCENT	
±0.2	±0.25	±0.3	±30'	0.1	

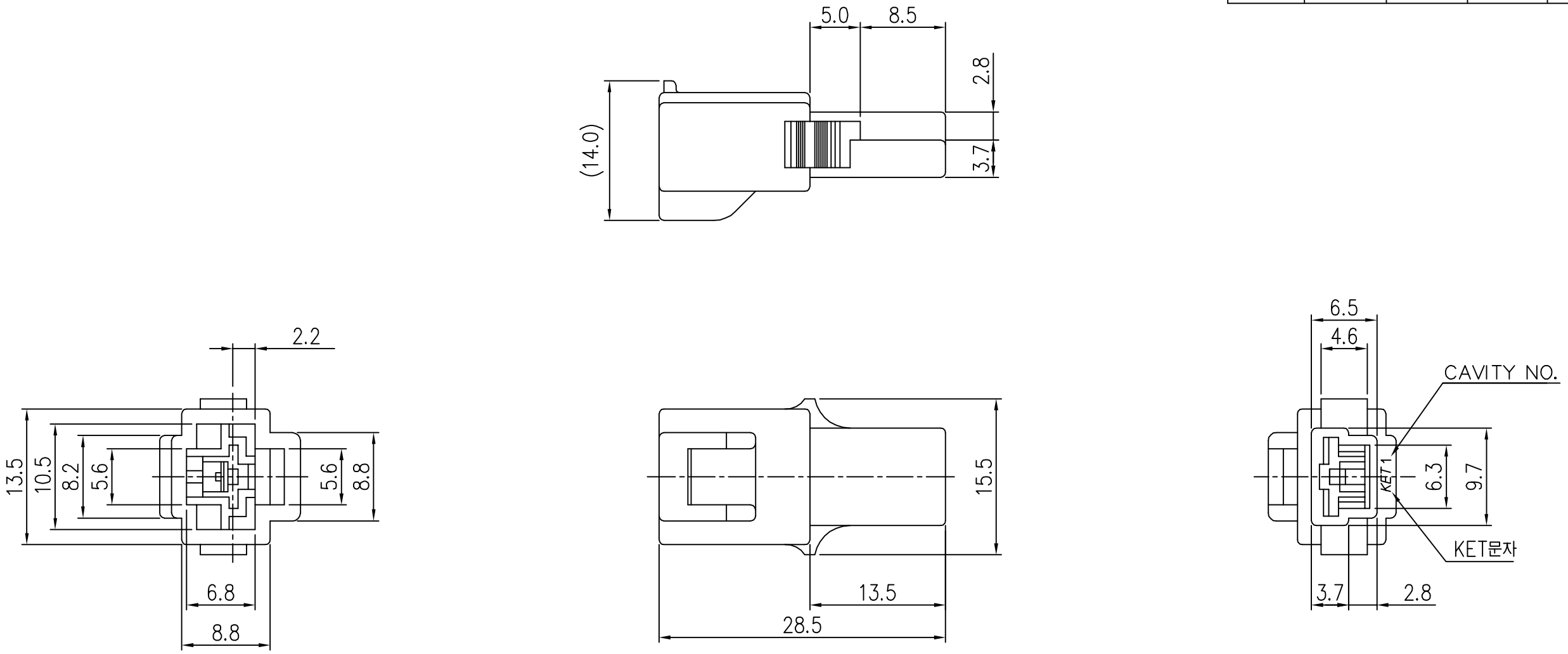

주 기

1.기능상 유해한 BURR, WELDLINE이 없을 것
2.적용 TERMINAL: ST740253-3/254-3/255-3
3.제품내 함유된 6대 유해물질 (납,수은,카드뮴,6가크롬, PBBs,PBDEs)은 EU ELV 지침 및 RoHS 법규에서 지정한 최대 허용 농도를 초과해서는 안된다.

NOTE

1. MUST BE FREE OF BURR, WELDLINE AND IMPERFECTION THAT AFFECT FUNCTION.
2. APPLICABLE TERMINAL : ST740253-3/254-3/255-3
3. 6 HAZARDOUS SUBSTANCES IN PARTS (LEAD,MERCURY, CADMIUM,HEXAVALENT CHROMIUM,PBBs,PBDEs) SHALL NOT EXCEED THE MAXIMUM PERMISSIBLE CONCENTRATION PRESCRIBED UNDER EU ELV DIRECTIVE & RoHS REGULATION.

△3

NO.	COLOR
0	NATURAL
1	RED
2	BLUE
3	YELLOW
5	BLACK

ISSUE MARK

LTR	REVISION RECORD	DR. / CHK.	APP.	DATE
△3	ECO-1409-113근거 도면 제작성	LCM / KSH	BUC	'14.09.19
△2	설계사양변경(S110128)근거 도면 제작성	KSJ / KSH	BUC	'11.04.27
△1	설계사양변경(S080012)근거 도면 제작성	PJM /		'08.01.23

DR. P.J.M '08.01.23 CHK.
CHK. APP. '08.01.24

MATERIAL △3 PET+PC(GWIT)
FINISH SEE TABLE
WIRE RANGE
INSULATION
TOLERANCE EXCEPT AS NOTED SEE TABLE
SCALE 2/1
PART NAME 250 1P REC. HS'G

KOREA ELECTRIC TERMINAL CO., LTD.
CLASS
TYPE HS'G LOCKING
PART NO. MG621934

(DIMENSIONS IN MM)