PART NO. MG613042T-*05

CUSTOMER DRAWING

GENERAL TOLERANCE (HOUSING)					USED ON
10MAX	50MAX	100MAX	100VR	( )	
±0.25	±0.35	±0.55	±0.95	±1.0	

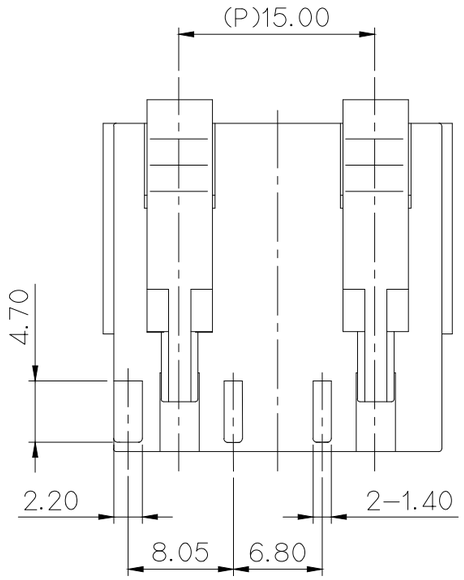

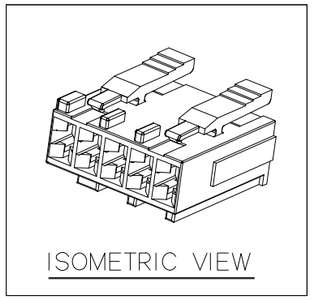

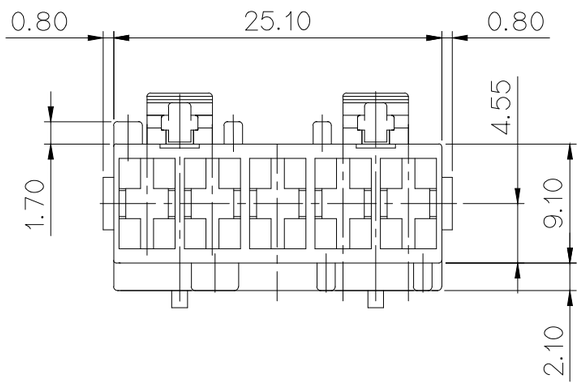

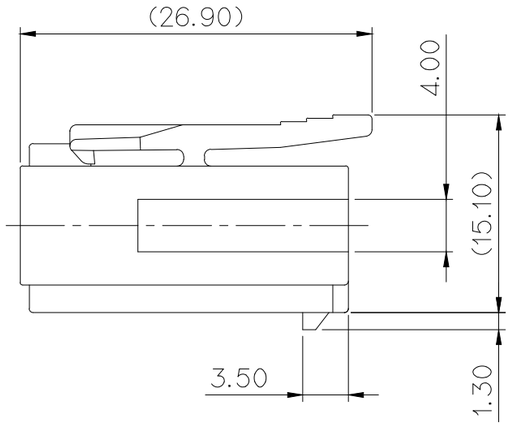

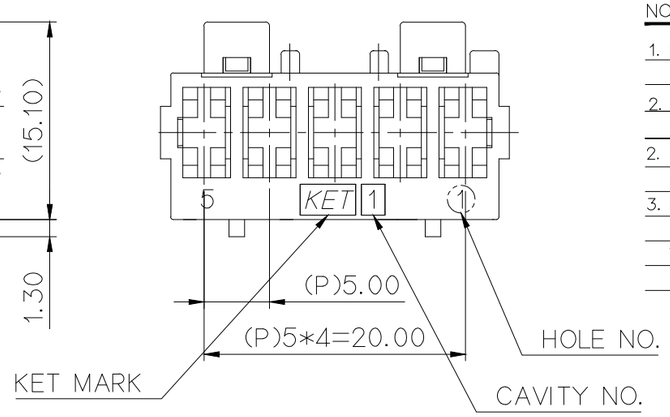

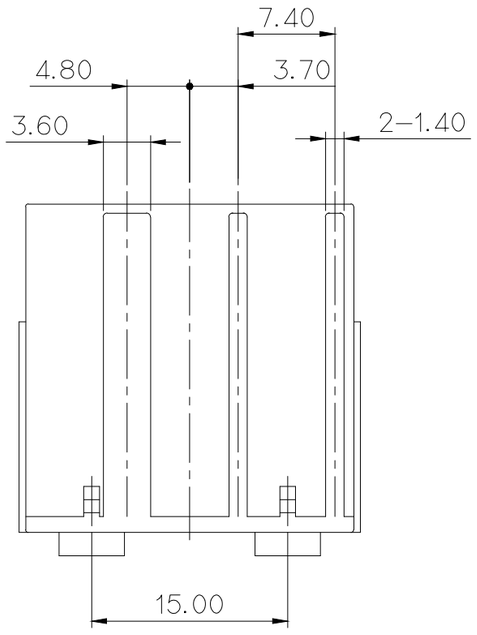

주 기

1.지시 하지 않은 반경 R은 0.2-0.3로 한다.
2.기능상 유해한 BURR 및 WELDLINE등이 없을 것.
3. 적용 터미널 :ST730948-3/0993-3,1329-3,1393-3M
적용 R/HOLDER : MG633661-1
4. 제품 내 함유된 6대 유해물질 (납, 수은, 카드뮴, 6가 크롬, PBBs, PBDEs)은 EU ELV 지침 및 RoHS 법규에서 지정한 최대 허용농도를 초과해서는 안 된다.

NOTE

1. UNLESS OTHERWISE SPECIFIED ALL RADIUS TO BE 0.2- 0.3 RADIUS.
2. MUST BE FREE OF BURR, WELD LINE AND IMPERFECTION THAT AFFECT FUNCTION.
2. APPLICABLE TERMINAL: ST730948-3/0993-3/1329-3/1393-3M
APPLICABLE R/HOLDER: MG633661-1
3. 6HAZARDOUS SUBSTANCES IN PARTS (Lead,Mercury,Cadmium, Hexavalent Chromium, PBBs, PBDEs) SHALL NOT EXCEED THE MAXIMUM PERMISSIBLE CONCENTRATION PRESCRIBED UNDER EU ELV DIRECTIVE & RoHS REGULATION

PART NO. *표시는 색상 표기 임.

	NO.	COLOR
	0	NATURAL
	1	RED
	2	BLUE
	3	YELLOW
*	5	BLACK
	6	GREEN

APPROVED
2019-11-06
KOREA ELECTRIC TERMINAL CO., LTD. Electronic Produc t Development Team

ISSUE MARK

LTR	REVISION RECORD	DR. / CHK.	APP.	DATE
1	ECO-1711-145 근거 도면 재작성	LCM KSH	BUC	'17.11.13

DR. HAK. '03.09.15 CHK.
CHK. APP. 9/22

MATERIAL	PET+PC(G.W.I.T)	KOREA ELECTRIC TERMINAL CO., LTD.	
FINISH	SEE TABLE		
WIRE RANGE		CLASS	
INSULATION		TYPE	250 DOOR LOCK
TOLERANCE EXCEPT AS NOTED SEE TABLE	SCALE 2/1	PART NO.	MG613042T-*05
PART NAME	250 5F HOUSING		

(DIMENSIONS IN MM)