PART NO. MG644638

CUSTOMER DRAWING

GENERAL TOLERANCE (HOUSING)							USED ON
10MAX	50MAX	100MAX	250MAX	250VR	ANGLE	ECCENT	
±0.2	±0.3	±0.55	±0.95	±1.4	±30'	0.1	

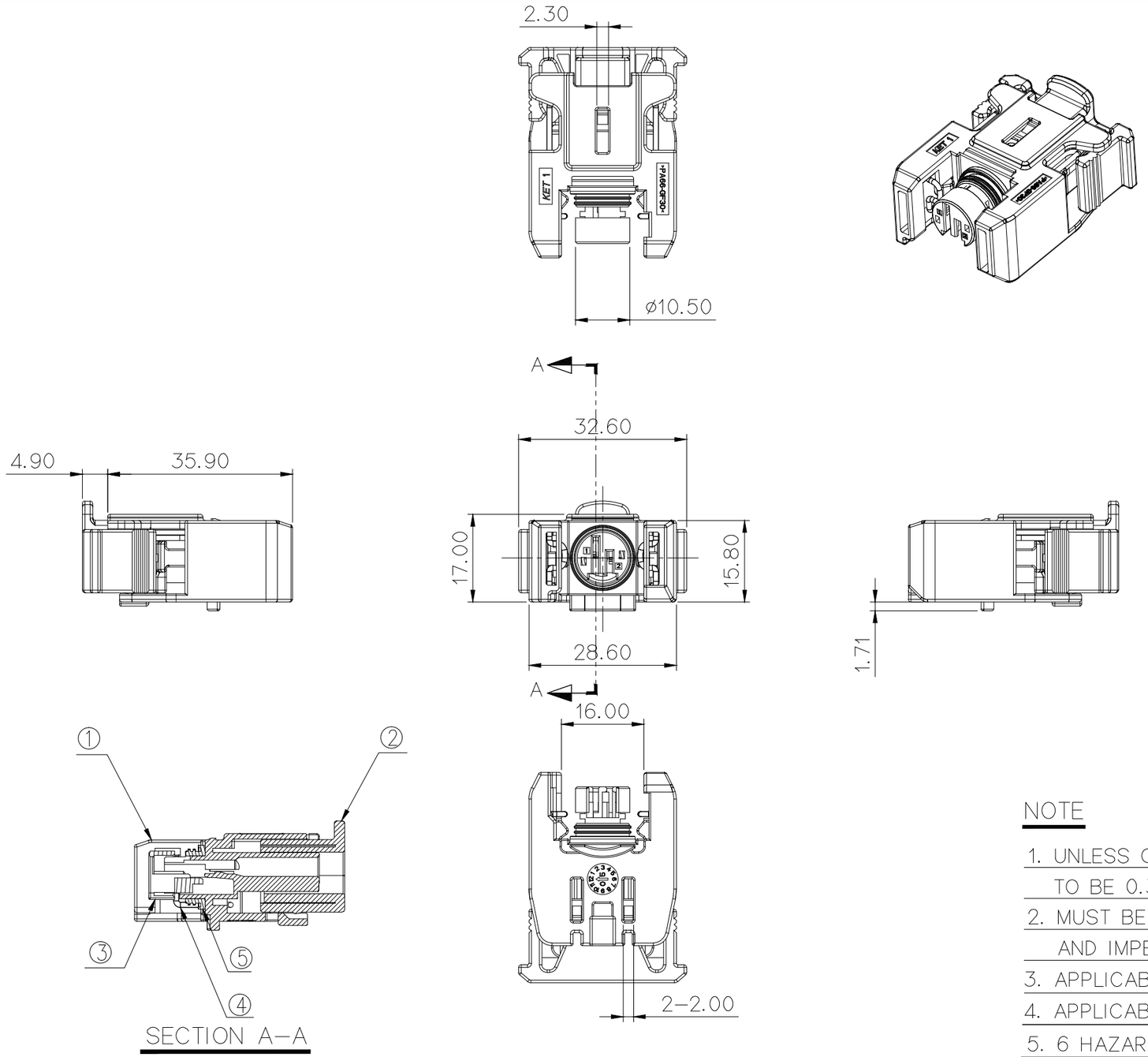

주 기

1. 지시하지 않은 반경 R은 0.3로 한다
2. 기능상 유해한 BURR 및 WELDLINE등이 없을것.
3. 적용 TERMINAL : ST731168-G
4. 적용 WIRE SEAL : MG684683
5. 제품내 함유된 6대 유해물질 (납, 수은, 카드뮴, 6가 크롬, PBBs, PBDEs)은 EU ELV 지침 및 RoHS 법규에서 지정한 최대 허용 농도를 초과해서는 안된다.

NOTE

1. UNLESS OTHERWISE SPECIFIED ALL RADIUS TO BE 0.3 RADIUS.
2. MUST BE FREE OF FLASH, SINK AND IMPERFECTION THAT AFFECT FUNCTION.
3. APPLICABLE TERMINAL NO. : ST731168-G
4. APPLICABLE WIRESEAL NO. : MG684683
5. 6 HAZARDOUS SUBSTANCES IN PARTS (LEAD, MECURY, CADMIUM, HEXAVALENT CHROMIUM, PBBs, PBDEs) SHALL NOT EXCEED THE MAXIMUM PERMISSIBLE CONCENTRATION PRESCRIBED UNDER EU ELV DIRECTIVE.

NO	PART NO	PART NAME	MATERIAL	FINISH
①	MG674639	150 WP 2F HOUSING_INJ	PA66+G/F30%	BLACK
②	MG674641	150 WP 2P CPA	HPA	YELLOW
③	MG674640	150 WP 2F F/HOLDER_INJ	PA66+G/F30%	D/GRAY
④	R602245	150 WP 2F SPRING_INJ	SUS	-
⑤	R602244	150 WP 2F INNERSEAL	SILICONE	RED

(DIMENSIONS IN MM)

APPROVED
2016-03-10
KOREA ELECTRIC TERMINAL CO., LTD. Product Developme nt Team 1

ISSUE MARK

LTR	REVISION RECORD	DR. / CHK.	APP.	DATE

DR.	JYS '10.09.16	CHK.	
CHK.		APP.	

MATERIAL	SEE TABLE	KET ENGINEERED	KOREA ELECTRIC TERMINAL CO., LTD.
FINISH	SEE TABLE		
WIRE RANGE		CLASS	150
INSULATION		TYPE	150
TOLERANCE EXCEPT AS NOTED	SEE TABLE	SCALE 1/1	PART NO. MG644638
PART NAME	150 WP 2F ASSY-INJ		